Product data sheet
CEE Panel inlet straight
IRRN 3232
Ord. No. 104079



SEZ industrial sockets, plugs and connectors have been designed to connect electrical devices to low voltage electric energy in civil engineering, electric assembly sector, engineering industry, etc. Sockets and plugs are available in the following ranges:

- nominal current: 16 A, 32 A, 63 A, 125 A
- nominal voltage: 110 V ~, 230 V ~, 400 V ~, 500 V ~
- nominal frequency: 50 Hz and 60 Hz
- degree of protection: IP 44, IP 54, IP 67
- number of poles: 3P (2P + PE), 4P (3P + PE), 5P (3P + N + PE)
- operating temperature: – 25 °C to + 55 °C
- halogen-free material in compliance with EN 60754-2

Our sockets, plugs and connectors are manufactured under the European standards EN 60309 – 1, 2 which comply with an international recommendation IEC 60309 – 1, 2.

Identification colou	blue
Nominal current	32 A
Nominal voltage	230 V ~
Frequency	50/60 Hz
Degree of protection	IP54
No. of pole	2P + PE
Earth hour position	6 h
Connection system	screws
Flexible conductors	2,5 - 6 mm²
Rigid conductors	2,5 - 10 mm²
Surface treatment contacts	passivated brass

Operating temperature	-25 °C to +55 °C
Glow wire test (GWT)	850 °C (active parts) 650 °C (passive parts)
Thermo-pressure with ball	125 °C (active parts) 80 °C (passive parts)
Insulation resistance	> 10 MΩ

Dimensional drawing

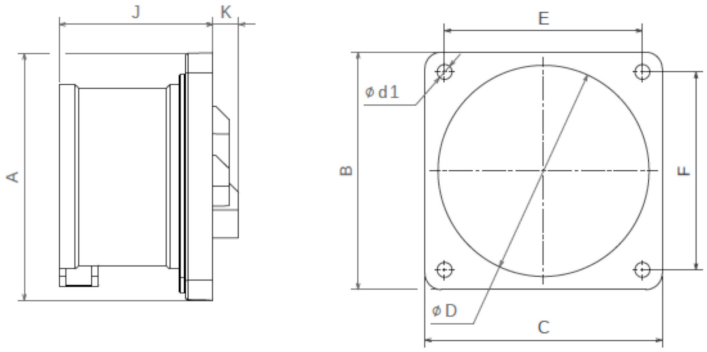

			(mm)								
Amp	Poles	Ord. No.	A	B	C	Ø d1	Ø D	E	F	J	K
32	3	104079	-	75	75	4	64	60	60	58	16

Technical symbols

screws

125 °C (active parts)
80 °C (passive parts)

-25 °C to +55 °C

GWT
850 °C (active parts)
650 °C (passive parts)

IP
IP54

Standards/Approvals

CE IEC 60309-1, - 2
STN EN 60309-1, - 2

SEZ DK a.s., M. R. Štefánika 1831/46
026 19 Dolný Kubín, Slovensko
Tel.: +421 43 5809 226; +421 908 948 580

e-mail: sales@sez.sk
www.sez.sk
Last update 2026/03

Data, measures, designs and pictures are shown as informative purposes only and could be changed without prior notice.