Product data sheet
CEE Cable socket
ISN 1632
Ord. No. 100736



SEZ industrial sockets, plugs and connectors have been designed to connect electrical devices to low voltage electric energy in civil engineering, electric assembly sector, engineering industry, etc. Sockets and plugs are available in the following ranges:

- nominal current: 16 A, 32 A, 63 A, 125 A
- nominal voltage: 110 V ~, 230 V ~, 400 V ~, 500 V ~
- nominal frequency: 50 Hz and 60 Hz
- degree of protection: IP 44, IP 54, IP 67
- number of poles: 3P (2P + PE), 4P (3P + PE), 5P (3P + N + PE)
- operating temperature: – 25 °C to + 55 °C
- halogen-free material in compliance with EN 60754-2

Our sockets, plugs and connectors are manufactured under the European standards EN 60309 – 1, 2 which comply with an international recommendation IEC 60309 – 1, 2.

Identification colour	blue	Operating temperature	-25 °C to +55 °C
Nominal current	16 A	Glow wire test (GWT)	850 °C (active parts)
Nominal voltage	230 V ~		650 °C (passive parts)
Frequency	50/60 Hz	Thermo-pressure with ball	125 °C (active parts)
Degree of protection	IP44		80 °C (passive parts)
No. of pole	2P + PE	Insulation resistance	> 10 MΩ
Earth hour position	6 h		
Connection system	screws		
Flexible conductors	1 - 2,5 mm²		
Surface treatment contacts	passivated brass		

Dimensional drawing

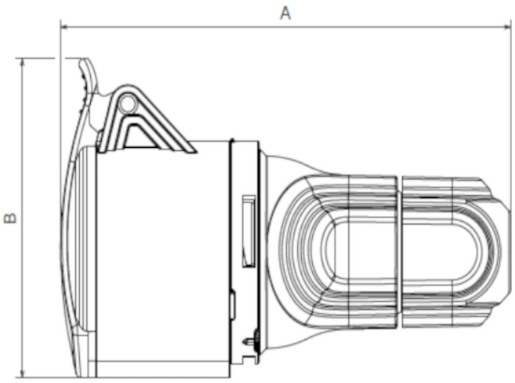

			(mm)		
Amp	Poles	Ord. No.	A	B	R
16	3	100736	136	81	7,5 - 15

R - sealing range

Technical symbols


screws


125 °C (active parts)
80 °C (passive parts)


-25 °C to +55 °C

GWT
850 °C (active parts)
650 °C (passive parts)

IP
IP44

Standards/Approvals

CE IEC 60309-1, - 2
STN EN 60309-1, - 2

SEZ DK a.s., M. R. Štefánika 1831/46
026 19 Dolný Kubín, Slovensko
Tel.: +421 43 5809 226; +421 908 948 580

e-mail: sales@sez.sk
www.sez.sk
Last update 2026/03

Data, measures, designs and pictures are shown as informative purposes only and could be changed without prior notice.