Product data sheet
**CEE Wall socket with box**
# IZVN 1643
Ord. No. 102357



SEZ industrial sockets, plugs and connectors have been designed to connect electrical devices to low voltage electric energy in civil engineering, electric assembly sector, engineering industry, etc. Sockets and plugs are available in the following ranges:

- nominal current: 16 A, 32 A, 63 A, 125 A
- nominal voltage: 110 V ~, 230 V ~, 400 V ~, 500 V ~
- nominal frequency: 50 Hz and 60 Hz
- degree of protection: IP 44, IP 54, IP 67
- number of poles: 3P (2P + PE), 4P (3P + PE), 5P (3P + N + PE)
- operating temperature: – 25 °C to + 55 °C
- halogen-free material in compliance with EN 60754-2

Our sockets, plugs and connectors are manufactured under the European standards EN 60309 – 1, 2 which comply with an international recommendation IEC 60309 – 1, 2.

| | |
|---|---|
| Identification colour | red |
| Nominal current | 16 A |
| Nominal voltage | 400 V ~ |
| Frequency | 50/60 Hz |
| Degree of protection | IP44 |
| No. of pole | 3P + PE |
| Earth hour position | 6 h |
| Connection system | screws |
| Flexible conductors | 1 - 2,5 mm² |
| Rigid conductors | 1 - 4 mm² |
| Surface treatment contacts | passivated brass |

| | |
|---|---|
| Operating temperature | -25 °C to +55 °C |
| Glow wire test (GWT) | 850 °C (active parts)<br>650 °C (passive parts) |
| Thermo-pressure with ball | 125 °C (active parts)<br>80 °C (passive parts) |
| Insulation resistance | > 10 MΩ |

## Dimensional drawing

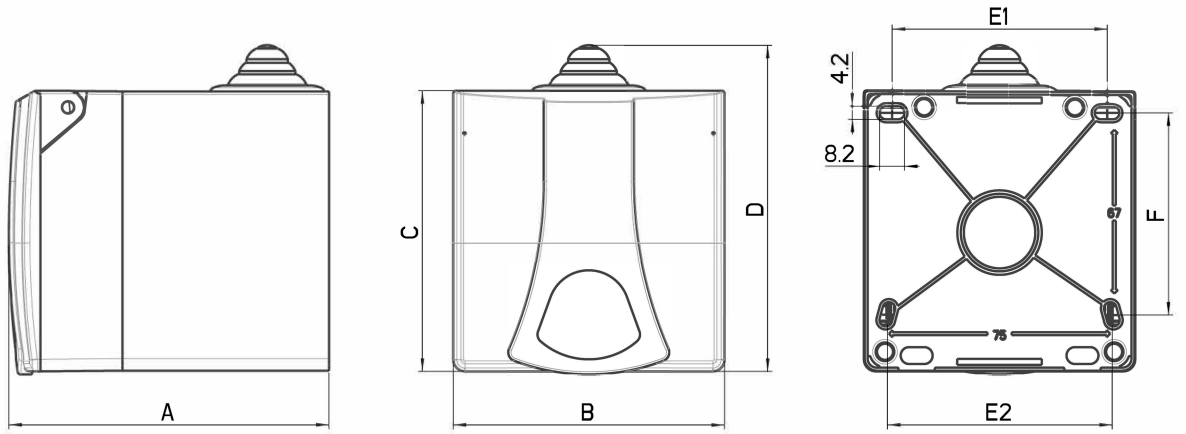


| | | | (mm) | | | | | | | |
|---|---|---|---|---|---|---|---|---|---|---|
| Amp | Poles | Ord. No. | A | B | C | D | E1 | E2 | F | R |
| 16 | 4 | 102357 | 106 | 90 | 93 | 108 | 71 | 75 | 67 | 8,0 - 22 |

R - sealing range

## Technical symbols



screws



125 °C (active parts)
80 °C (passive parts)



-25 °C to +55 °C

GWT

850 °C (active parts)
650 °C (passive parts)

IP

IP44

## Standards/Approvals

CE IEC 60309-1, - 2
STN EN 60309-1, - 2

**SEZ DK a.s., M. R. Štefánika 1831/46**
**026 19 Dolný Kubín, Slovensko**
Tel.: +421 43 5809 226; +421 908 948 580

e-mail: sales@sez.sk
**www.sez.sk**
Last update 2023/05

Data, measures, designs and pictures are shown as informative purposes only and could be changed without prior notice.